CITY OF MOUND

REMODELING

REQUIRED INFORMATION WHEN APPLYING FOR A PERMIT

☐ 1. **A completed building permit application with signature (attached).**

☐ 2. **Plans. Two sets of plans should be drawn to scale and indicate the following:**

- Location of exterior walls
- Location of all existing and proposed interior walls with dimensions
- Name of each existing and proposed room (bedroom, kitchen, etc.)
- Location and sizes of windows and doors
- If bedrooms are created, egress windows are required (one in each sleeping room).
- Number, description and location of proposed plumbing fixtures or changes to existing system
- Location of smoke detectors (required)
- Indicate construction materials to be used and location (2"x4" wall studs 16" o.c., fiberglass insulation, ½" gypsum wallboard, etc.)
- Number of, description and location of proposed changes to existing Heating Ventilation and Air Conditioning (HVAC) system.

REQUIRED INSPECTIONS

All inspection requests require a 24-hour notice. Required inspections are as follows:

1. **Framing/ Insulation-** to be made after all framing, insulation and ductwork is in place and the rough electrical, and plumbing systems are approved.
2. **Plumbing** – (if applicable)
3. **Heating/Mechanical/Fireplace** – (if applicable)
4. **Electrical**
5. **Final-** to be made when **all** work is complete.

GENERAL BUILDING REQUIREMENTS

1. Must provide unobstructed headroom of 7 feet in habitable spaces, kitchens, halls, bathrooms, toilet compartments, laundry rooms and basements.
2. Foundation plates or sills resting on concrete slabs shall be treated wood or foundation grade redwood.
3. Adequately secure sill-sole plates to floor.
4. Fire blocking requirements – please reference attached sheet.

Note: The aforementioned criteria represent general code requirements relative to remodeling. For specific code requirements, please contact the Building Inspection Department at 952-442-7520.

Smoke Detectors

Required. See attached "Smoke Detectors" handout for details.

Minimum Clear Dimensions

2'6"	Width for toilet (centered)
3'0"	Hall width
3'0"	Stairway width
7'6"	Ceiling height in habitable rooms (living, sleeping, eating, cooking)

Escape Windows and Window Wells

Required. See attached "Egress Window Information" handout for details.

Insulation

Foundation walls require R-10 insulation. Framed walls require R-19 insulation. Attic requires R-44 insulation. Rigid foam insulation with a frame spread rating greater than 75 and/or a smoke density rating greater than 450 shall be protected with ½" gypsum board or ¼" plywood.

Bathtub trap openings and other penetrations in the floor above shall be filled with fiberglass or foam insulation.

A vapor barrier (4 mil poly or equal) is required on the warm side of insulated exterior walls. This includes behind the showers and tubs on exterior walls. Water resistive gypsum board cannot be applied over another vapor barrier (such as 4 mil poly), or on ceilings.

Ceramic Tile

Ceramic tile in the shower/tub area shall be applied over concrete board.

Safety Glazing

Safety glazing is required in doors and enclosures for hot tubs, whirlpools, saunas, steam rooms, bathrooms and showers. Glazing in any portion of a building wall enclosing these compartments where the bottom exposed edge of the glazing is less than 60" above the walking surface.

Safety glazing is required in fixed or operable panels adjacent to a door where the nearest exposed edge of the glazing is within a 24" arc of either vertical edge of the door in a closed position and where the bottom exposed edge of the glazing is less than 60" above the walking surface.

Mechanical

A separate mechanical permit is required by the person doing the work.

All habitable rooms shall be provided with a heating system capable of maintaining 72 degrees Fahrenheit at a point three feet above the finished floor.

Main trunk lines are to be adequately sized to allow additional supply branch ducts to be provided to any additional finished rooms. Provide return air ducts, the same size as the supply ducts, to all rooms but the kitchen and bathroom.

Each bathroom requires an exhaust fan to the exterior. The ducts shall be insulated to an R-4.2 the first three feet from the exterior wall, and terminate at least three feet from any opening such as an openable window or combustion air duct in the exterior wall.

Fireplaces

Masonry and manufactured fireplaces require a separate permit.

Plumbing

A separate plumbing permit is required by the person doing the work.

An access panel is required for hose bib shutoff valves and upper level tub traps. A shower or combination shower/bath must be equipped with an anti-scald type shower control valve. The valve must be the thermostatic or pressure-balancing type.

Electrical

A separate State Electrical Permit is required for any new wiring and must be obtained by the person doing the work. The application form is available at the City Building Inspections Department at a cost of $1.75.

****

*The State of Minnesota requires that all residential building contractors, remodelers and roofers obtain a state license unless they qualify for a specific exemption from the licensing requirements. Any person claiming an exemption must provide a copy of a Certificate of Exemption from the Department of Commerce to the City before a permit can be issued.

* To determine whether a particular contractor is required to be licensed or to check on the licensing status of individual contractors, please call the Minnesota Department of Commerce at 651-296-2594 or toll free 1-800-657-3602.

If you have any questions or need to schedule an inspection please call the Building Inspection Department at **(952) 442-7520 or toll free 1-888-446-1801** between 7:30 a.m. and 4:30 p.m. Monday thru Friday.

NOTE: IT WILL TAKE APPROXIMATELY 7 TO 10 BUSINESS DAYS TO GET A PERMIT ONCE THE PLANS AND APPLICATION HAVE BEEN SUBMITTED.

FIRE BLOCKS

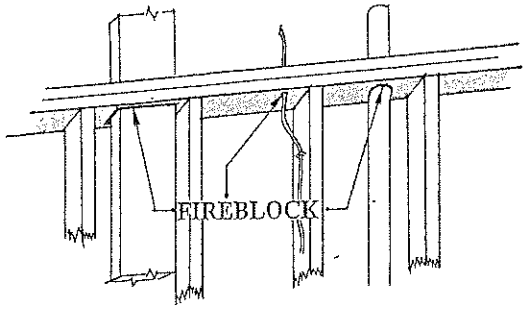

FIREBLOCKING REQUIRED AROUND VENTS, PIPES, DUCTS, CHIMNEY, CABLES, OR OTHER OPENINGS WHICH ALLOW FIRE TO MOVE FROM SPACE TO SPACE WITHIN THE FRAMING

2000 IRC Section R602.8

FIRE BLOCK CONSTRUCTION

- TWO INCH NOMINAL LUMBER
- DOUBLE LAYER OF 1 INCH NOMINAL LUMBER
- ONE LAYER OF 23/32 INCH WOOD STRUCTURAL PANEL SHEATHING WITH JOINTS BACKED BY 23/32 WOOD STRUCTURAL PANEL
- ONE LAYER OF ¾ INCH PARTICLEBOARD WITH JOINTS BACKED BY ¾ INCH PARTICLEBOARD
- ½ GYPSUM BOARD, CEMENT BOARD, MINERAL FIBER, OR GLASS FIBER SUCURED IN PLACE

2000 IRC Section R602.8.1

FIRE BLOCKS

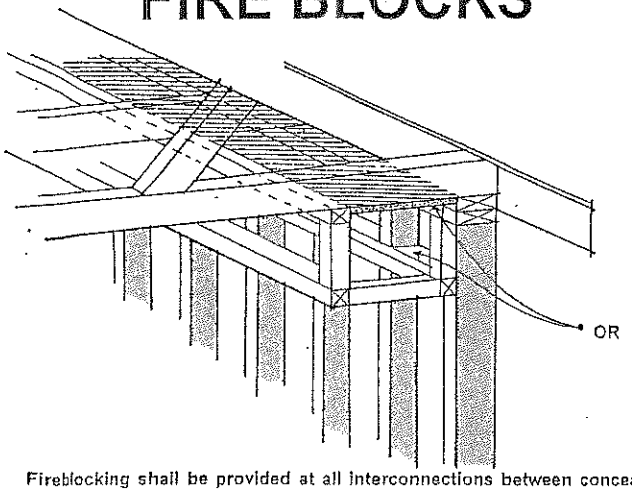

Fireblocking shall be provided at all interconnections between concealed vertical and horizontal spaces such as occur at soffits, drop ceilings and cove ceilings.

2000 IRC Section R602.8

Smoke/CO Detectors

GENERAL REQUIREMENTS

The following shall be provided with smoke detectors:

- Dwelling units
- Congregate residences
- Hotel or lodging house guest rooms that are used for sleeping purposes

All detectors must be installed in accordance with the approved manufacturer's instructions.

SINGLE-FAMILY OCCUPANCY REQUIREMENTS

When interior alterations, repairs or additions requiring a permit occur, or when one or more sleeping rooms are added or created, smoke detectors shall be installed throughout the existing dwelling unit as required for new dwellings; the smoke detectors shall be interconnected and hard wired. (Exception: When alterations/repairs do not result in the removal of interior walls or ceiling finish, unless there is an attic, crawl space or basement available that could provide access or work on the exterior that does not require entry into the interior for inspection.)

a. One in each sleeping room.
b. One outside of each separate sleeping area in the immediate vicinity of the bedrooms.
c. A smoke detector shall be installed on each story and in the basement.
d. In dwellings where a story or basement is split into two or more levels the smoke detector shall be installed on the upper level except when the lower level contains a sleeping area, a detector shall be installed on each level.

POWER SOURCE

In new construction, the smoke detectors must receive their power from the building wiring and have a battery backup in the event power is lost. In remodeling where connection to the building wiring is difficult to achieve, battery operated detectors may be used.

Wiring must have no disconnecting means other than the primary over current protection. This means detectors must be wired directly into the building's wiring system and that no switches, plugs or mechanical disconnects are permitted between the main fuse box and the detector.

LOCATION OF SMOKE DETECTORS IN DWELLING UNITS

Smoke detectors must be located in each sleeping room and centrally located on the ceiling or wall of the hallway or area giving access to sleeping rooms. When the unit has more then one story, a detector must be placed on each floor, including the basement. Where sleeping rooms are on an upper floor, the code requires the detector to be placed on the ceiling in close proximity to the stairway.

In dwelling units where the ceiling height of a room open to the hallway serving the bedrooms exceeds that of the hallway by 24 inches or more, smoke detectors shall be installed in the hallway and in the adjacent room. Detectors must sound an alarm audible in all sleeping areas of the dwelling unit in which they are located.

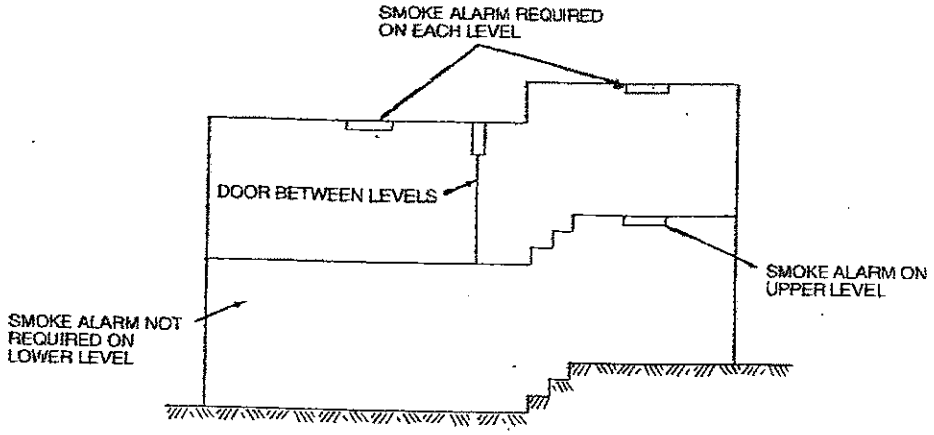

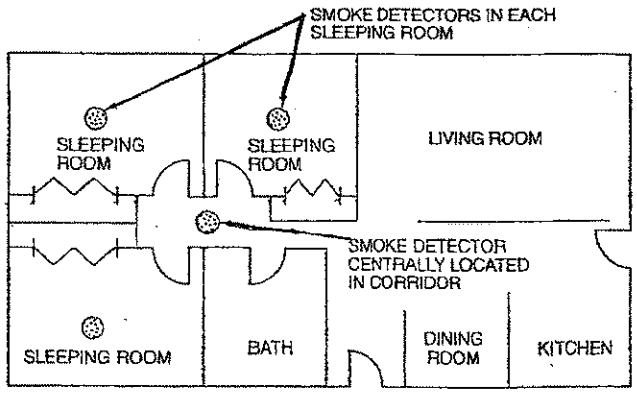

SMOKE DETECTOR REQUIRED ON EACH STORY, INCLUDING BASEMENT

C.O. DETECTORS

Carbon monoxide (C.O) detectors must be located within 10 feet of each bedroom doorway. They can be plug-in, hardwired, or battery operated.

If you have any questions or need to schedule an inspection please call the Building Inspections Department at **(952) 442-7520 or toll free 1-888-446-1801** between 7:30 a.m. and 4:30 p.m. Monday thru Friday.

EGRESS WINDOW INFORMATION

These requirements pertain to new construction, additions or change of existing use to sleeping quarters.

LOCATION OF EMERGENCY ESCAPES

Basements with habitable space and every sleeping room shall have at least one operable window or door approved for emergency escape or rescue. The emergency door or window shall be operable from the inside to provide a full, clear opening without the use of separate tools.

GENERAL REQUIREMENTS

Escape or rescue windows shall have a minimum net clear openable area of 5.7 square feet. Grade floor openings shall have a minimum net clear openable area of 5.0 square feet. The minimum net clear openable height dimensions shall be 24 inches. The minimum net clear openable width dimension shall be 20 inches.

When windows are provided as a means of escape or rescue, they shall have a finished sill height not more than 44 inches above the floor.

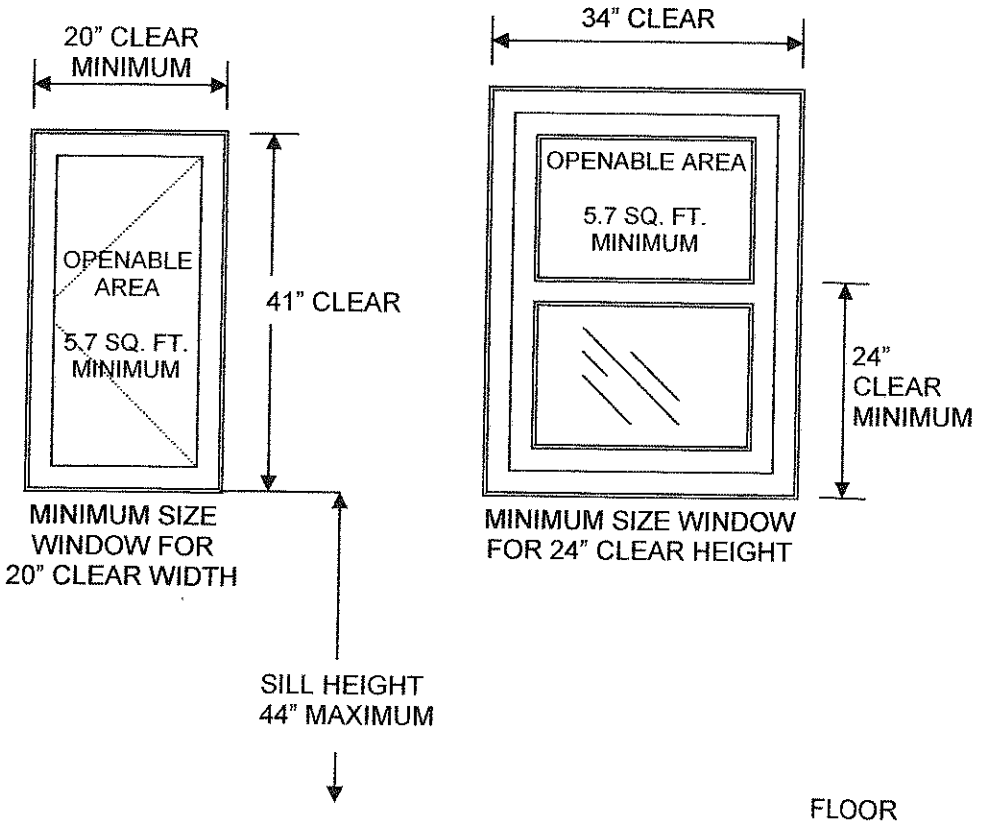

Escape and rescue windows with a finished sill height below the adjacent ground elevation shall have a window well. Window wells at escape or rescue windows shall comply with the following:

1. The clear horizontal dimensions shall allow the window to be fully opened and provide a minimum accessible net clear opening of 9 square feet with a minimum dimension of 36 inches.

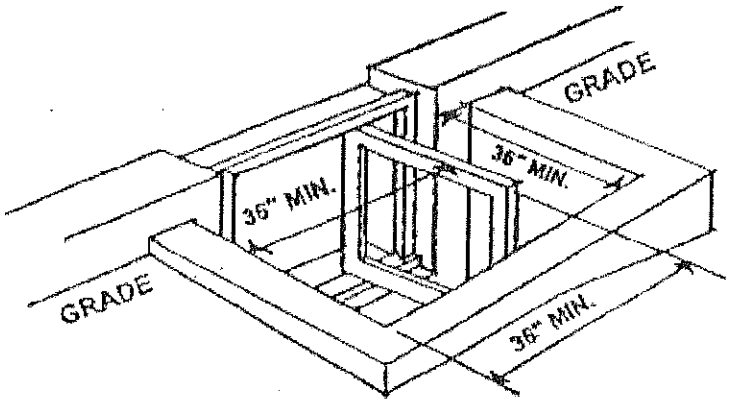

2. Window wells with a vertical depth of more than 44 inches shall be equipped with an approved permanently affixed ladder or stairs that are accessible with the window in the fully open positions. The ladder or stairs shall not encroach into the required dimensions of the window well by more than 6 inches.

3. Ladders or rungs shall have an inside width of at least 12 inches, shall project at least 3 inches from the wall and shall be spaced not more than 18 inches on center vertically for the full height of the window well.

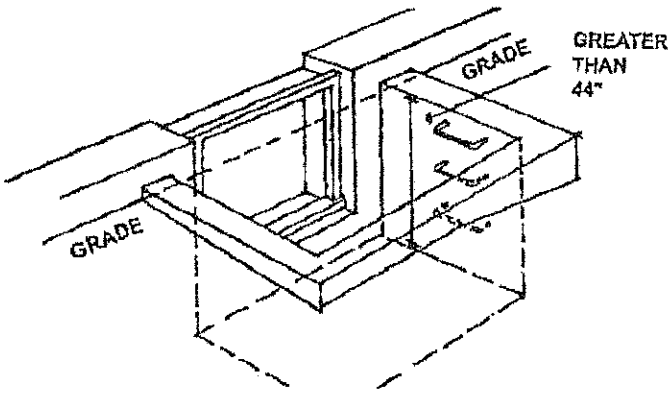

Bars, grilles, grates or similar devices may be installed on the emergency escape or rescue windows, doors or window wells, provided the devices are equipped with approved release mechanisms that are openable from the inside without the use of a key or special knowledge or effort.

For answers to specific code requirements please contact the Building Inspection Department at 952-442-7520.

BUILDING PERMIT APPLICANT: PROPERTY OWNER

I, _____, understand that the State of Minnesota requires that all
Property Owner
residential building contractors, remodelers and roofers obtain a state license unless they qualify for a specific exemption from the licensing requirements. This license requirement applies to owners of residential real estate who build or improve such property for purposes of speculation or resale.

By signing this document, I attest to the fact that I am improving this house for my own use and am not building or improving this house for the purpose of reselling it. I hereby claim to be exempt from the state licensing requirements because I am not in the business of building or remodeling on speculation or for resale and that the house for which I am applying for this permit, located at:

_____
Property Address

Mound, is the only residential structure I have built or improved in the past 24 months.

Furthermore, I acknowledge that I may be hiring independent contractors to perform certain aspects of the construction or improvement of this house and I understand that some of these contractors may be required to be licensed by the State of Minnesota. I understand that unlicensed residential contracting, remodeling, and/or roofing activity is a misdemeanor under Minn. Stat. §326B.082, subd. 16 and can also result in a fine of up to $10,000. I further state that I understand that the filing of a false statement with the City of Mound may also result in criminal prosecution and/or civil penalties pursuant to applicable city ordinances and/or state statutes.

I have also been informed and acknowledge that by listing myself as the contractor for this project, I alone will be responsible to the City of Mound for compliance with all applicable building codes and city ordinances in connection with the work being performed on this property. **I also understand that if I hire an unlicensed contractor, my only recourse in the event I have a dispute with my contractor will be to pursue private civil action (lawsuit) against the contractor, and that even if I am successful in a lawsuit, I will not be able to make a claim for compensation from the Contractor Recovery Fund, the state's consumer protection program for licensed contractors.**

_____ _____
Signature Date

For questions or information on contractor licensing, or to check the licensing status and enforcement history of a particular contractor, call the Minnesota Department of Labor and Industry, Construction Codes and Licensing Division, at (651) 284-5069 or 1-800-657-3944, or visit their web site at: www.dli.mn.gov/CCLD/RBC.

CITY OF MOUND

2415 Wilshire Blvd
Mound, MN 55364
Phone 952-472-0607
Fax 952-472-0620

☐ Handout Given

☐ Lead Handout Given

BUILDING PERMIT

_____

TO BE FILLED OUT BY APPLICANT - INCOMPLETE APPS MAY NOT BE PROCESSED

SITE ADDRESS:_____ **PID:**_____

1) Was the home constructed before 1978? (**YES** □, continue with line 2, **NO** □ continue without completing EPA Section)
2) Will the work disturb ≥6 sq ft of interior painted surfaces or ≥20 sq ft of exterior painted surfaces? (**YES** □ go to line 4, **NO** □ line 3)
3) Are there any windows being replaced? (**YES** □, go to line 4, **NO** □ continue without completing EPA Section)
4) Has this home been Certified Lead Free? (**YES** □, you MUST Attach Certification Information, **NO** □ complete line 5)
5) EPA Contractor Certification Number: **NAT -**

PROPERTY OWNER: Address:
City: State: Zip: Email:
Contact Name: Phone:

CONTRACTOR: Address:
City: State: Zip: Phone: Fax:
Contractor License No: Contact Name: Phone:
Email:

ARCHITECT: Address:
City: State: Zip: Phone: Fax:
Email: Contact Name: Phone:

TYPE OF WORK:
□ Commercial □ Residential

EST. VALUATION OF WORK
$ _____
Square feet:

□ New Construction	□ Deck	□ Re-Roof
□ Change of Use	□ Pool	□ Re-Side
□ Finish Basement	□ Retaining Wall	□ Shed _____
□ Remodel	□ Porch	□ Window/Door Replacement
□ Addition	□ Demolition	# being replaced _____
□ Garage-Attached/Detach	□ Misc Other	□ Misc Other
□ Accessory Structure		

Detailed Description of Work:

Signature of this application by the legal property owner or a licensed contractor, as the owner's representative, is required and authorizes the Zoning Administrator or designee and the Building Official or designee to enter upon the property to perform needed inspections. Entry may be without prior notice. I hereby acknowledge that I have read this application and state that all information is true and correct to the best of my knowledge. I further agree that all work performed will be in accordance with approved plans, specifications and conditions and to abide by all ordinances of the Municipality and the laws of the State of Minnesota regarding actions taken pursuant to this permit. **I agree to pay all plan review fees even if I choose not to proceed with the work.** Permit expires when work is not commenced within 180 days from date of permit, or if work is suspended, abandoned, or not inspected for 180 days. Work beyond the scope of this permit, or work without a permit or inspection, will be subject to a penalty.

SIGNATURE OF APPLICANT:_____ **DATE:**_____
PRINTED NAME: □ Owner □ Contractor □ Owner's Representative

OFFICE USE ONLY

OCCUP. TYPE: CONST. TYPE: CODE: BLDG SPRINKLED Yes / No
VALUATION: $

Permit Fee: $ _____
Plan Review Fee: $ _____
State Surcharge: $ _____
Site Inspection Fee: $ _____
S.E.C. Fee: $ _____
Investigation fee / Other Fee: $ _____
Copy Charge ($.25 per 8.5 x11 page) $ _____
License Check ($5) / Lead Check ($5) $ _____
Sub Total $

	COPIED	APPROVED		
ZONING				
CITY ENG/DPW				
PUBLIC WORKS				
		UTIL	TAX	OTHER
ASSESSING/UTIL BILL				
BUILDING OFFICAL				

Special Conditions/Required Setbacks:

Building Approval By: DATE:
Printed Building Approval By: □ License Verification □ Lead Verification - Checked By:
City Approval By: DATE:

Information supplied on this form will be considered public according to the MN Government Data Practices Act.
See reverse side for an important statement regarding Indian Mounds.