RESIDENTIAL ADDITIONS

REQUIRED INFORMATION WHEN APPLYING FOR A PERMIT

☐ 1. A completed building permit application with **EPA certificate and contractor's license**, if applicable.

☐ 2. Effective September 1, 2011, new Minnehaha Creek Watershed District (MCWD) rules related to wetlands, floodplain and erosion control are in effect. These rules are now under the jurisdiction of the MCWD as regulatory authority and permitting was officially turned back to the District by the Mound City Council on August 23, 2011. You are directed to contact the MCWD (952-471-0590) related to the new regulations and applicable permits that may be needed to undertake the proposed new addition project. **Be advised that the building permit will not be released until the City is provided a copy of the MCWD permit(s) and/ or receipt of written confirmation from the MCWD that no permit is needed for the project.**

☐ 3. An accurate, scaled drawing of the property including: all existing property lines, existing buildings and proposed addition(s) and distances from buildings to property lines (see sample on pg. 4). A Certificate of Survey may be required if individual issues warrant.

☐ 4. Hardcover Calculation Sheet

☐ 5. Building Height Calculation form and required drawing

☐ 6. Property Owner as Building Permit Applicant form (if applicable)

☐ 7. Plans. Two sets of plans should be **drawn to scale** and indicate the following:

NOTE: On large additions a $1000 erosion control escrow and a $5000 project management escrow may be required at the discretion of staff.

FLOOR PLAN:

- Location of exterior walls
- Location of all existing and proposed interior walls
- Name of each existing and proposed room
- Location and sizes of windows and doors
- Wall construction materials
- Location of existing or proposed plumbing fixtures, furnace, water heater, etc.
- Location of stairways, fireplaces, etc.
- Location of smoke detectors

CROSS SECTION PLAN:

- Proposed finished ceiling height
- Finish materials for walls, floor, and ceiling
- Existing and proposed insulation and vapor barrier

REQUIRED INSPECTIONS

Call MnSpect at (952) 442-7520 to make an appointment. All inspection requests require a 24-hour notice. Required inspections are as follows:

1. **Preconstruction Site Inspection** – May be required depending on site conditions. Separate fee will be charged at permit issuance.

2. **Footing and/or Foundation** – Inspect footing prior to placement of concrete; foundation prior to backfilling. When applicable, damp-proofing and insulation must be in place.
3. **Framing/ Insulation** - to be made after all framing, insulation and ductwork is in place and the rough electrical, and plumbing systems are approved.
4. **Final** - to be made when work is complete and after final approval of electrical.

SMOKE DETECTORS

Required. See attached "Smoke Detectors" handout for details.

MINIMUM CLEAR DIMENSIONS

2'6" Width for toilet (centered)
3'0" Hall width
3'0" Stairway width
7'6" Ceiling height in habitable rooms (living, sleeping, eating, cooking)

ESCAPE WINDOWS AND WINDOW WELLS

Required. See attached "Emergency Escapes" handout for details.

NATURAL LIGHT

All habitable rooms shall be provided with aggregate glazing area of not less than 8 percent of the floor area of such rooms. Natural ventilation shall be through windows, doors, louvers or other approved openings to the outdoor air. Such openings shall be provided with ready access or shall otherwise be readily controllable by the building occupants. The minimum openable area to the outdoors shall be 4 percent of the floor area being ventilated.

FRAMING

Lumber shall be grade-stamped. The bottom wall plate shall be treated wood and securely fastened to the floor slab with nails/screws or construction adhesive. Engineered floor trusses/beams shall not be notched, or altered without written approval from the manufacturer.

STAIRWAYS

Minimum stairway headroom clearance is 6'8" (measured vertically from a plane parallel and tangent to the stairway tread nosing to the above at all points). Landings at the bottom of the stairways required 36" of depth before the door or the wall. All interior and exterior stairways shall be provided with a means to illuminate the stairs, including the landings and treads.

ENCLOSED AREA UNDER STAIRS

The walls and ceiling of an enclosed space below an interior stairway shall be protected with one layer of 1/2" type X gypsum board. If the area is greater than 100 square feet, a heat run shall be provided to the area for ventilation.

INSULATION

Foundation walls require R-10 insulation. Framed walls require R-19 insulation. Attic requires R-44 insulation. Rigid foam insulation with a frame spread rating greater than 75 and/or a smoke density rating greater than 450 shall be protected with ½" gypsum board or ¼" plywood.

Bathtub trap openings and other penetrations in the floor above shall be filled with fiberglass or foam insulation.

A vapor barrier (4 mil poly or equal) is required on the warm side of insulated exterior walls. This includes behind the showers and tubs on exterior walls. Water resistive gypsum board cannot be applied over another vapor barrier (such as 4 mil poly), or on ceilings.

CERAMIC TILE

Ceramic tile in the shower/tub area shall be applied over concrete board.

SAFETY GLAZING

Safety glazing is required in doors and enclosures for hot tubs, whirlpools, saunas, steam rooms, bathrooms and showers. Glazing in any portion of a building wall enclosing these compartments where the bottom exposed edge of the glazing is less than 60" above the walking surface.

Safety glazing is required in fixed or operable panels adjacent to a door where the nearest exposed edge of the glazing is within a 24" arc of either vertical edge of the door in a closed position and where the bottom exposed edge of the glazing is less than 60" above the walking surface.

MECHANICAL – Separate permit required

All habitable rooms shall be provided with a heating system capable of maintaining 72 degrees Fahrenheit at a point three feet above the finished floor.

Main trunk lines are to be adequately sized to allow additional supply branch ducts to be provided to any additional finished rooms. Provide return air ducts, the same size as the supply ducts, to all rooms but the kitchen and bathroom.

Each bathroom requires an exhaust fan to the exterior. The ducts shall be insulated to an R-4.2 the first three feet from the exterior wall, and terminate at least three feet from any opening such as an openable window or combustion air duct in the exterior wall.

FIREPLACES – Separate permit required

PLUMBING – Separate permit required

An access panel is required for hose bib shutoff valves and upper level tub traps. A shower or combination shower/bath must be equipped with an anti-scald type shower control valve. The valve must be the thermostatic or pressure-balancing type.

ELECTRICAL

A separate State Electrical Permit is required for any new wiring and must be obtained by the person doing the work. The application form is available at the City Building Inspections Department or on line at cityofmound.com.

NOTE: IT WILL TAKE APPROXIMATELY 7 TO 10 BUSINESS DAYS TO GET A PERMIT ONCE THE PLANS AND APPLICATION HAVE BEEN REVIEWED FOR ZONING COMPLIANCE AND SUBMITTED FOR BUILDING OFFICIAL REVIEW.

SAMPLE OF SITE PLAN **1 INCH = ____ FEET**

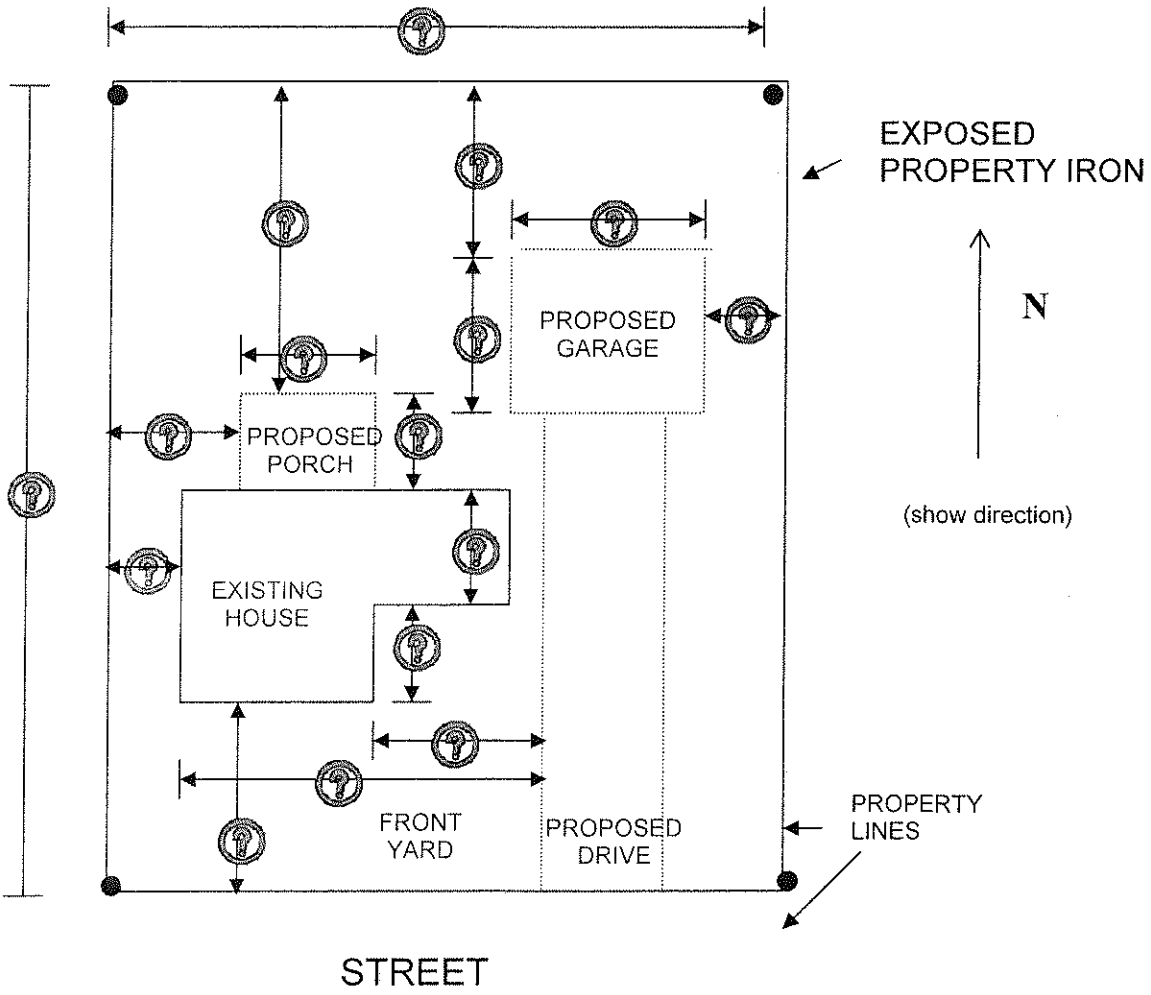

CITY OF MOUND

BUILDING HEIGHT CALCULATION
HOW-TO FORM

Per Mound City Code, building height and building line are defined as follows:

Subd. 14. Building Height. The vertical distance to be measured from the average grade of a building line to the top, to the cornice of a flat roof, to the deck line of a mansard roof, to a point on the roof directly above the highest wall of a shed roof, to the uppermost point on a round or other arch type roof, to the mean distance of the highest gable on a pitched or hip roof.

Subd. 15. Building Line. A line parallel to the street right-of-way or the ordinary high water level at any story level of a building and representing the minimum distance which all or any part of the building is set back from said right-of-way line or ordinary high water level.

1. Describe the type of roof style proposed: _____ (ie. pitched, flat, shed roof, etc.)

2. Provide the average grade elevation of the building line facing the street._____ based on proposed grades referenced on submitted survey.

3. Provide the average grade elevation of the building line facing the lake. _____ based on proposed grades referenced on submitted survey.

4. Provide the average grade elevation of the building line(s). _____.

5. Provide the height of the proposed structure as measured from the lowest grade elevation to highest point of structure. _____.

6. The applicant (or designated representative) must provide written and graphic information to confirm that the proposed height of the new structure, based on the Zoning Ordinance definition, meets the height regulations of 2 ½ stories or thirty-five (35) feet. Please note that the graphic documented **must be scaled** to allow for checking by Staff. Samples attached.

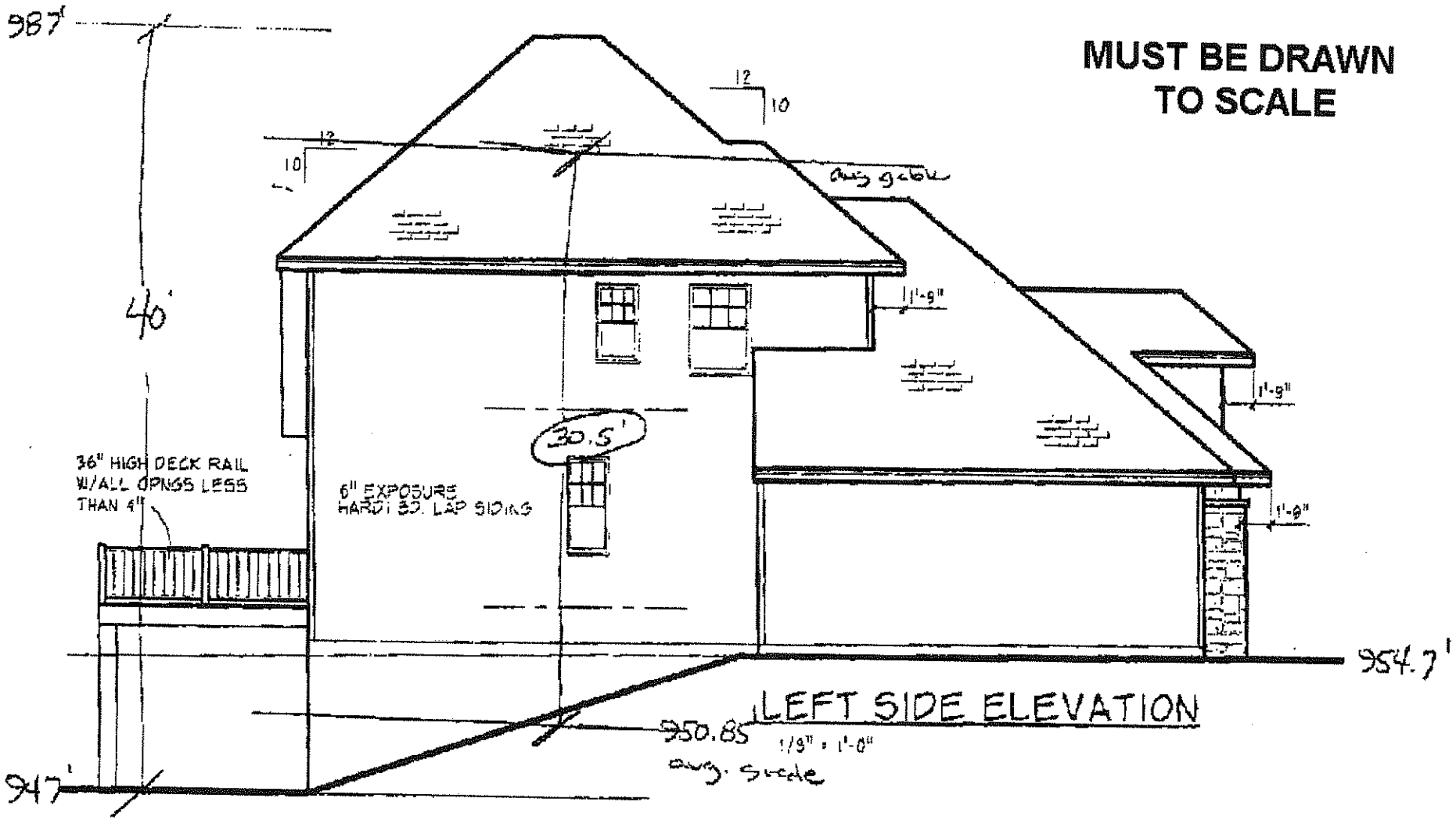

MUST BE DRAWN TO SCALE

COMBUSTION AIR/MAKE-UP AIR WORKSHEET

Date: _____

Name: _____ Site Address: _____

Total floor Area (including basement): _____

Size of Room with Combustion Equipment: _____

***Check all that apply**

Year Home was Constructed

Pre-1994	1994-2003	2004 and After
☐	☐	☐

Combustion Equipment (Existing & New)

	Atmospheric Vent	Fan Assist/ Power Vent	Direct Vent	Electric
Water Heater Input: _____ BTU	☐	☐	☐	☐
Furnace/Boiler Input: _____ BTU	☐	☐	☐	☐
Furnace/Boiler Input: _____ BTU	☐	☐	☐	☐
Other _____	☐	☐	☐	☐

Fireplace

Gas D.V.	Gas Log Insert	Wood Burning/Solid Fuel	Factory Wood Burning/ Solid Fuel Closed Combustion with Combustion Air
☐	☐	☐	☐

Ventilation System/Per Energy Code, Not Mechanical Code

N/A	Exhaust Only		Balanced
☐	☐	Fan 1 CFM: _____ Fan 2 CFM: _____	☐

Exhaust Systems

	Yes		N/A
Kitchen	☐	CFM: _____	☐
Central Vacuum	☐	CFM: _____	☐
Other _____	☐	CFM: _____	☐

New Code Requirements from the IMC and IFGC

(with applicable State Amendments)

- Pressure equalization – Make-up Air and Combustion Air worksheets *1346.501.4 & 1346.5304*
- Stud Cavities shall not convey air from more than one floor level *IMC 602.3*
- All exposed gas lines (except black steel) shall be labeled "GAS" and include the working pressure of the line *IFGC 401.5 & 1346.5401.5.1*
- Gas piping protection - nail plates must extend 4" beyond wall plates and studs *IFGC 404.5*
- Sediment trap – drip leg must be a minimum of 3" in length *1346.5408.4*
- Piping support – ½" O.D. tubing supports spaced at intervals not exceeding 4' *IFGC 415.1*
- Testing of gas piping – test pressure of not less than 25psi, test duration of 10 minutes (with prior approval from the Building Official), test gauge with 2psi increments or less with a pressure range of not greater than twice the test pressure applied, and the test pressure shall be within the middle 50 percent of the test gauge pressure range *1346.5406.4.1 – 1346.5406.4.3*

Exit Terminations of vents, exhausts, and intakes	*Windows/Doors/Gravity Air Inlets*	*Grade Level*	*Forced Air Inlet*	*Gas meter*
Kitchen, Bath, Dryer, HRV Exhausts	3 foot min. any direction	1 foot min. above finish grade	3 foot min. below, if within 10 feet horizontally	
Mechanical Draft Equipment	4 foot min. below or 4 foot min. to the side, 1 foot min. above	1 foot min. above finish grade	3 foot min. above within 10 feet horizontally	3 foot min. to the side, not directly above meter
Combustion Air Intake	0 feet clearance needed	1 foot min. above finish grade	0 feet clearance needed	3 foot min. below, within 10 feet horizontally
HRV Exhaust	3 foot min. any direction	1 foot min. above finish grade	3 foot min. below, if within 10 feet horizontally	
Direct Vent Appliance	Input(btu/hr) <10k = 6" 10k-50k = 9" >50k = 12"	1 foot min. above finish grade	Input(btu/hr) <10k = 6" 10k-50k = 9" >50k = 12"	

Smoke/CO Detectors

GENERAL REQUIREMENTS

The following shall be provided with smoke detectors:

- Dwelling units
- Congregate residences
- Hotel or lodging house guest rooms that are used for sleeping purposes

All detectors must be installed in accordance with the approved manufacturer's instructions.

SINGLE-FAMILY OCCUPANCY REQUIREMENTS

When interior alterations, repairs or additions requiring a permit occur, or when one or more sleeping rooms are added or created, smoke detectors shall be installed throughout the existing dwelling unit as required for new dwellings; the smoke detectors shall be interconnected and hard wired. (Exception: When alterations/repairs do not result in the removal of interior walls or ceiling finish, unless there is an attic, crawl space or basement available that could provide access or work on the exterior that does not require entry into the interior for inspection.)

a. One in each sleeping room.
b. One outside of each separate sleeping area in the immediate vicinity of the bedrooms.
c. A smoke detector shall be installed on each story and in the basement.
d. In dwellings where a story or basement is split into two or more levels the smoke detector shall be installed on the upper level except when the lower level contains a sleeping area, a detector shall be installed on each level.

POWER SOURCE

In new construction, the smoke detectors must receive their power from the building wiring and have a battery backup in the event power is lost. In remodeling where connection to the building wiring is difficult to achieve, battery operated detectors may be used.

Wiring must have no disconnecting means other than the primary over current protection. This means detectors must be wired directly into the building's wiring system and that no switches, plugs or mechanical disconnects are permitted between the main fuse box and the detector.

LOCATION OF SMOKE DETECTORS IN DWELLING UNITS

Smoke detectors must be located in each sleeping room and centrally located on the ceiling or wall of the hallway or area giving access to sleeping rooms. When the unit has more then one story, a detector must be placed on each floor, including the basement. Where sleeping rooms are on an upper floor, the code requires the detector to be placed on the ceiling in close proximity to the stairway.

In dwelling units where the ceiling height of a room open to the hallway serving the bedrooms exceeds that of the hallway by 24 inches or more, smoke detectors shall be installed in the hallway and in the adjacent room. Detectors must sound an alarm audible in all sleeping areas of the dwelling unit in which they are located.

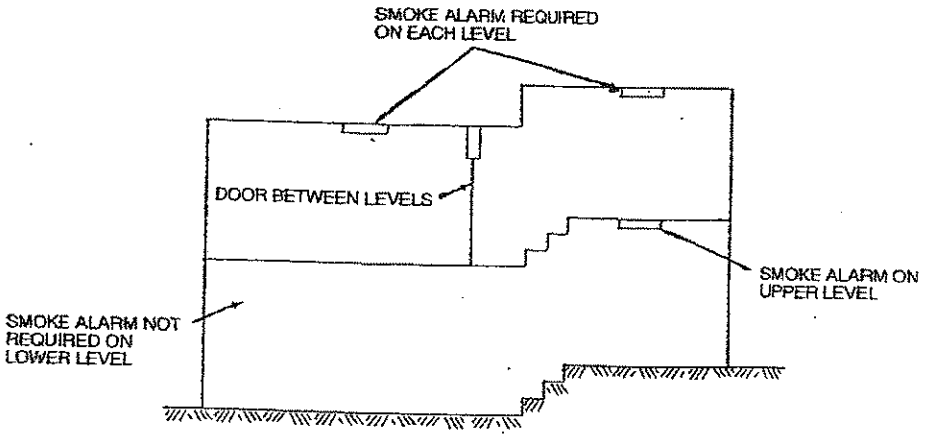

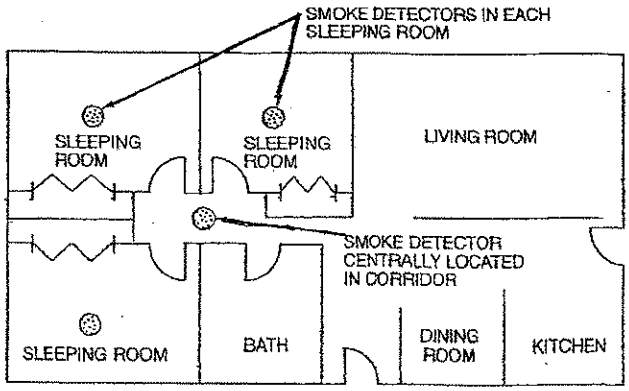

SMOKE DETECTOR REQUIRED ON EACH STORY, INCLUDING BASEMENT

C.O. DETECTORS

Carbon monoxide (C.O) detectors must be located within 10 feet of each bedroom doorway. They can be plug-in, hardwired, or battery operated.

If you have any questions or need to schedule an inspection please call the Building Inspections Department at **(952) 442-7520 or toll free 1-888-446-1801** between 7:30 a.m. and 4:30 p.m. Monday thru Friday.

EGRESS WINDOW INFORMATION

These requirements pertain to new construction, additions or change of existing use to sleeping quarters.

LOCATION OF EMERGENCY ESCAPES

Basements with habitable space and every sleeping room shall have at least one operable window or door approved for emergency escape or rescue. The emergency door or window shall be operable from the inside to provide a full, clear opening without the use of separate tools.

GENERAL REQUIREMENTS

Escape or rescue windows shall have a minimum net clear openable area of 5.7 square feet. Grade floor openings shall have a minimum net clear openable area of 5.0 square feet. The minimum net clear openable height dimensions shall be 24 inches. The minimum net clear openable width dimension shall be 20 inches.

When windows are provided as a means of escape or rescue, they shall have a finished sill height not more than 44 inches above the floor.

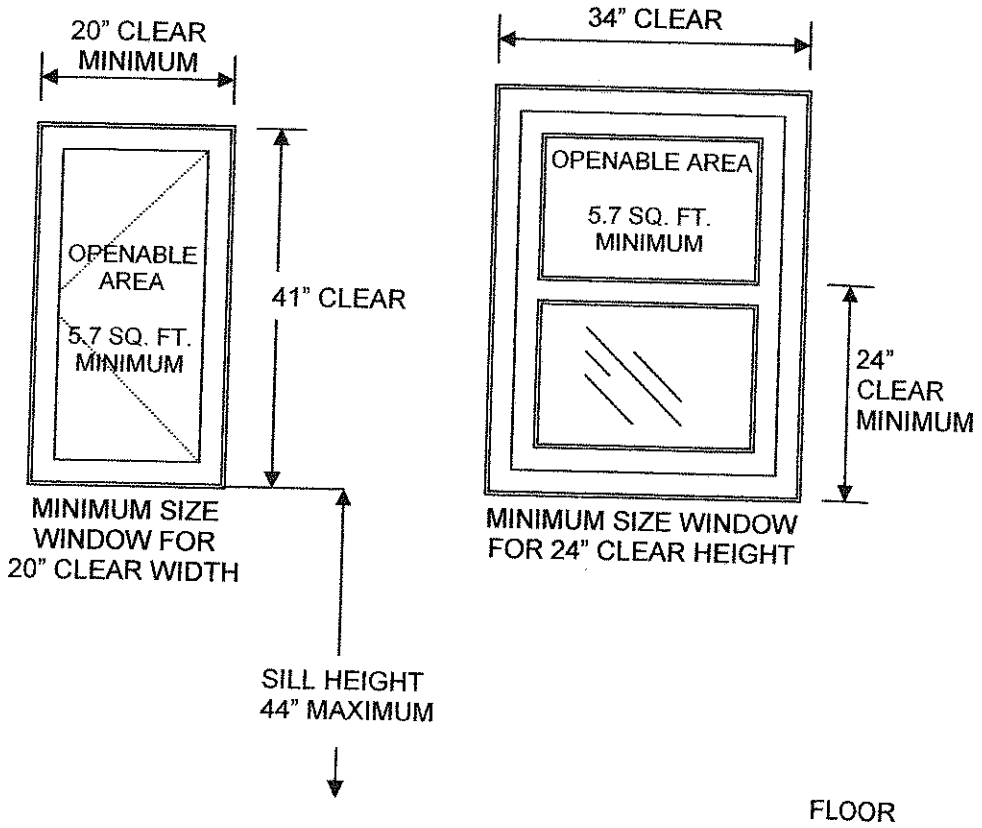

Escape and rescue windows with a finished sill height below the adjacent ground elevation shall have a window well. Window wells at escape or rescue windows shall comply with the following:

1. The clear horizontal dimensions shall allow the window to be fully opened and provide a minimum accessible net clear opening of 9 square feet with a minimum dimension of 36 inches.

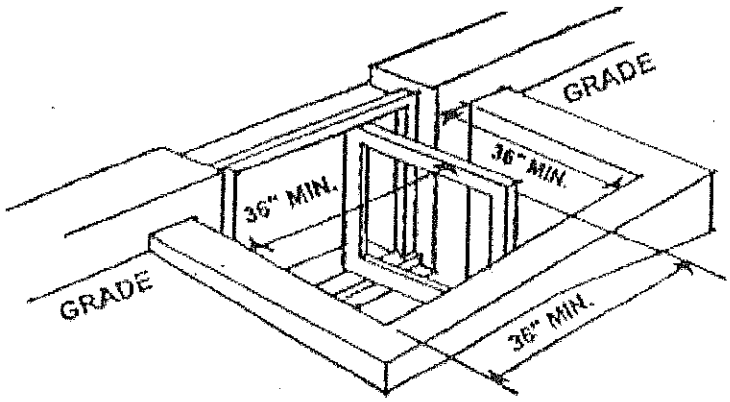

2. Window wells with a vertical depth of more than 44 inches shall be equipped with an approved permanently affixed ladder or stairs that are accessible with the window in the fully open positions. The ladder or stairs shall not encroach into the required dimensions of the window well by more than 6 inches.

3. Ladders or rungs shall have an inside width of at least 12 inches, shall project at least 3 inches from the wall and shall be spaced not more than 18 inches on center vertically for the full height of the window well.

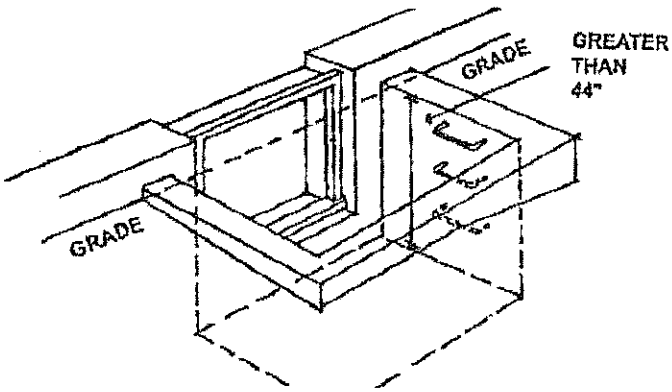

Bars, grilles, grates or similar devices may be installed on the emergency escape or rescue windows, doors or window wells, provided the devices are equipped with approved release mechanisms that are openable from the inside without the use of a key or special knowledge or effort.

For answers to specific code requirements please contact the Building Inspection Department at 952-442-7520.

SURVEY REQUIREMENTS

PERMIT & ZONING APPLICATION AND AS-BUILT SURVEY REQUIREMENTS

Each certified land survey shall indicate that permanent iron monuments are in place at each lot corner. The survey shall also show the following:

1. North arrow and scale of drawing.
2. Legal description of parcel.
3. Lot area of parcel measured in square feet and dimension of all lot lines. Lot area is measured above the Ordinary High Water as listed below (929.4 for Lake Minnetonka).
4. Dimensions and location of all known easements, and type of easement.
5. Location of all existing buildings. For remodeling or addition permits, dimensions of each building and reference distances from the lot lines to the nearest point of each building must be shown.
6. Location of existing utilities, including but not limited to manholes, hydrants, catch basins power poles, and telephone boxes. Show all **existing and <u>proposed sewer and water service locations</u>, and where they come into the structure with dimensional ties**. Water shut off cannot be located in the driveway.
7. Front, side, and rear yard setback dimensions to existing and proposed buildings; all outside dimensions of buildings, including **decks** and **fireplaces**.
8. Setback dimensions to existing buildings located on adjacent lots if they are within 25 feet of side lot line; first floor and at grade elevations of corners of buildings on adjacent lots.
9. Location of irons at each side lot line establishing proposed front building line. The maintenance of these irons, once established by the surveyor, shall be the responsibility of the building permit applicant. Wood stakes or lath shall be placed at the four corners of the proposed building.
10. Location of proposed driveway, future garage site if not included with building permit application and minimum of two (2) off-street parkway spaces (325 S.F. per stall).
11. Benchmark elevation to National Geodetic Vertical Datum (N.G.V.D.) and description of location. Benchmarks are available at City Hall, 952-472-0600.
12. Grade elevations at the following points (additional elevations may be required):
    a. Existing and proposed at each lot corner.
    b. Existing street elevations (centerline and top of curb) at each lot line extended and both sides of proposed driveway at intersection with street.
    c. Existing elevations on side lot lines, at extension of proposed front and rear building lines and any major grade changes.
    d. Proposed lowest floor, garage floor, and top of foundation elevations.
    e. Existing and proposed elevations at all major corners of building.
    f. Existing and proposed elevations at top and bottom of any major slopes.
    g. Proposed finished grade at front building line and/or ordinary high water line.
    h. TOP OF BLUFF AND SETBACK FROM TOP OF BLUFF.

13. Location and elevations at top and bottom of any proposed retaining walls.
14. Dimension of lot frontage on public street and at Ordinary High Water Mark.
15. Lot width dimension as measured at the minimum front setback line and at the 50 foot lakeshore setback from the Ordinary High Water Mar.
16. Proposed direction of surface water drainage indicated by arrows and elevations, and percent of slope on driveway if applicable.
17. The Ordinary High Water elevation/contour must be shown if lot abuts body of water or is within 50 feet of said water.
18. The Floodplain elevation/contour must be shown and labeled (Both MCWD and City). Any possible wetlands should also be marked. Filling within the floodplain and wetlands shall not occur without permission from the City of Mound and the Minnehaha Creek Watershed District.

	Ordinary High Water	**Flood Elevation**	**Lowest Floor Elevation**
LAKE MINNETONKA	929.4	MCWD 931.5 / CITY 931	933
DUTCH LAKE	939.2	940	942
LAKE LANGDON	932.1	935	937

FOUNDATION SURVEY REQUIREMENTS

As part of the pre-construction site inspection the following staking is required to be completed:

1. Setback dimension stakes on the property line with setback dimension measurement to at least three foundation corners of the proposed structure.
2. Offset and grade stakes to proposed foundation corners.

After foundation is in place and prior to construction proceeding, contractor is to have surveyor verify in the field the location and elevation of building foundation per building plan requirements and a survey copy given to the City of Mound for approval to proceed.

NOTE: Foundation survey verification documentation requirement <u>may</u> be waived if the setbacks for the subject property are 5 feet or greater over the established minimums of front, side, and rear setback requirements for the district.

CITY OF MOUND

2415 Wilshire Blvd
Mound, MN 55364
Phone 952-472-0607
Fax 952-472-0620

BUILDING PERMIT

☐ Handout Given

☐ Lead Handout Given

_____

TO BE FILLED OUT BY APPLICANT - INCOMPLETE APPS MAY NOT BE PROCESSED

SITE ADDRESS:_____ **PID:**_____

1) Was the home constructed before 1978? (**YES** ☐, continue with line 2, **NO** ☐ continue without completing EPA Section)
2) Will the work disturb ≥6 sq ft of interior painted surfaces or ≥20 sq ft of exterior painted surfaces? (**YES** ☐ go to line 4, **NO** ☐ line 3)
3) Are there any windows being replaced? (**YES** ☐, go to line 4, **NO** ☐ continue without completing EPA Section)
4) Has this home been Certified Lead Free? (**YES** ☐, you MUST Attach Certification Information, **NO** ☐ complete line 5)
5) EPA Contractor Certification Number: **NAT -**

PROPERTY OWNER: Address:
City: State: Zip: Email:
Contact Name: Phone:

CONTRACTOR: Address:
City: State: Zip: Phone: Fax:
Contractor License No: Contact Name: Phone:
Email:

ARCHITECT: Address:
City: State: Zip: Phone: Fax:
Email: Contact Name: Phone:

TYPE OF WORK:
☐ Commercial ☐ Residential

EST. VALUATION OF WORK
$ _____
Square feet:

☐ New Construction	☐ Deck	☐ Re-Roof
☐ Change of Use	☐ Pool	☐ Re-Side
☐ Finish Basement	☐ Retaining Wall	☐ Shed _____
☐ Remodel	☐ Porch	☐ Window/Door Replacement
☐ Addition	☐ Demolition	# being replaced _____
☐ Garage-Attached/Detach	☐ Misc Other	☐ Misc Other
☐ Accessory Structure		

Detailed Description of Work:

Signature of this application by the legal property owner or a licensed contractor, as the owner's representative, is required and authorizes the Zoning Administrator or designee and the Building Official or designee to enter upon the property to perform needed inspections. Entry may be without prior notice. I hereby acknowledge that I have read this application and state that all information is true and correct to the best of my knowledge. I further agree that all work performed will be in accordance with approved plans, specifications and conditions and to abide by all ordinances of the Municipality and the laws of the State of Minnesota regarding actions taken pursuant to this permit. **I agree to pay all plan review fees even if I choose not to proceed with the work.** Permit expires when work is not commenced within 180 days from date of permit, or if work is suspended, abandoned, or not inspected for 180 days. Work beyond the scope of this permit, or work without a permit or inspection, will be subject to a penalty.

SIGNATURE OF APPLICANT:_____ **DATE:**_____
PRINTED NAME: ☐ Owner ☐ Contractor ☐ Owner's Representative

OFFICE USE ONLY

OCCUP. TYPE: CONST. TYPE: CODE: BLDG SPRINKLED Yes / No
VALUATION: $

Permit Fee: $ _____
Plan Review Fee: $ _____
State Surcharge: $ _____
Site Inspection Fee: $ _____
S.E.C. Fee: $ _____
Investigation fee / Other Fee: $ _____
Copy Charge ($.25 per 8.5 x11 page) $ _____
License Check ($5) / Lead Check ($5) $ _____
Sub Total $

	COPIED	APPROVED		
ZONING				
CITY ENG/DPW				
PUBLIC WORKS				
		UTIL	TAX	OTHER
ASSESSING/UTIL BILL				
BUILDING OFFICAL				

Special Conditions/Required Setbacks:

Building Approval By: DATE:
Printed Building Approval By: ☐ License Verification ☐ Lead Verification - Checked By:
City Approval By: DATE:

Information supplied on this form will be considered public according to the MN Government Data Practices Act.
See reverse side for an important statement regarding Indian Mounds.

Supplemental Information for Building Permits – Indian Mounds and Earthwork Sites

Applicant is advised that there are historic Indian burial mounds and/or earthwork sites in and around the City of Mound. While many of the mounds have been severely impacted by development over the years, the mounds do receive protection under state law and penalties are imposed for unauthorized disturbance of mounds.

The City maintains some general information about possible sites in an inventory of the "Earthwork/Mound/Burial Areas" contained on the Cultural Resources Map in the Mound Comprehensive Plan and in surveys of the burial sites from Hill and Lewis in 1911 but the completeness or accuracy of this information is unknown. Additional information may be obtained through the Minnesota State Archeologist.

Any formal investigation of a site, including a determination of whether a mound or burial area exists on a subject site, is the responsibility of the property owner or developer. The issuance of permits by the City to do work on a site does not relieve the owner or the developer of that responsibility.